HL1: Normal power indicator (AC230V/0.5A active output)
HL2: Alternative power indicator (AC230V/0.5A active output)
HD1: Normal supply close indicator (AC230V/0.5A active output)
HD2: Alternative supply close indicator (AC230V/0.5A active output)
401/402: Fire control feedback (passive output)
501: Generator signal common terminal
502: Generator signal start terminal
503: Generator signal stop terminal
601/602: Fire control signal input (DC24V)
Note: For 3P product, make sure to connect normal N to 103 terminal, and alternative N to 303 terminal.
The power & close indicating output is active AC230V/0.5A

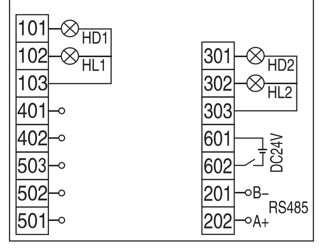

CDQ1s-160~3200 Digital LED Display Type Secondary Terminal Wiring Diagram

6 Terminal wiring method

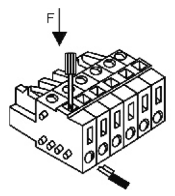

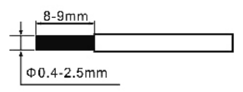

Press the point downwards forcedly with a flathead screwdriver, and embed the wire, as shown as shown in figure.

7 How to install the switch

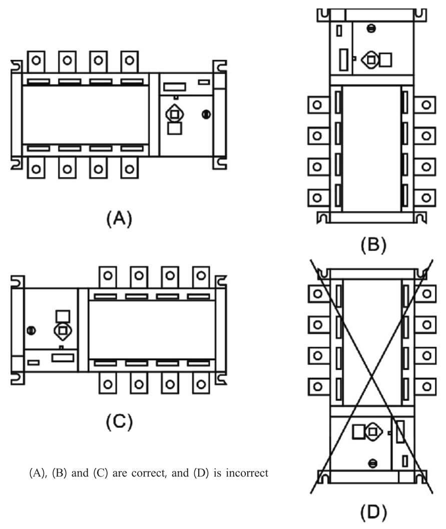

(A), (B) and (C) are correct, and (D) is incorrect

8 Description of Digital LED display type controller

8.1 Function introduction

* Power supply type: Grid power-Grid power, Grid power-Generator

* Main power return type:

Automatically transfer and restore: Once the deviation of the normal supply is monitored, ATSE will transfer the load to the alternative (emergency) supply from normal supply. If the normal supply recovered, the load will return to the normal supply automatically.

Non-automatically restore: Once the deviation of the normal supply is monitored, ATSE will transfer the load to the alternative (emergency) supply from the normal supply; If the normal power recovered, ATSE cannot return to the normal supply automatically, and at this time, if the alternative (emergency) supply fails, ATSE cannot return to the normal supply; ATSE can return to the normal supply only by manual intervention.

Automatically transfer and non-automatically restore (mutual backup): Once the deviation of the normal supply is monitored, ATSE will transfer the load to the alternative (emergency) supply from the normal supply; if the normal supply recovered, ATSE cannot return to the normal supply automatically, and at this time, if the alternative (emergency) power fails or the manual intervention is conducted, ATSE can return to the normal supply.

* **Transfer threshold**: when the undervoltage transfer happens when phase voltage lower than 187V±10%; the overvoltage transfer happens when the phase voltage is higher than 263V±10%;

* **RS485 communication**: Normal supply and alternative supply close/open control, normal and alternative supply voltage monitoring, and threshold and delay parameters setting;

Note: This function is optional, and be sure to describe when placing customized order.

8.2 Parameter setting

The digit can be modified when flashing. The Set button is used to step, with "▲" button to add value and with "▼" button to minus value; after setting, press the "↵" button to save and return to the setting selection mode, and press this button "↵" again to exit the setting;

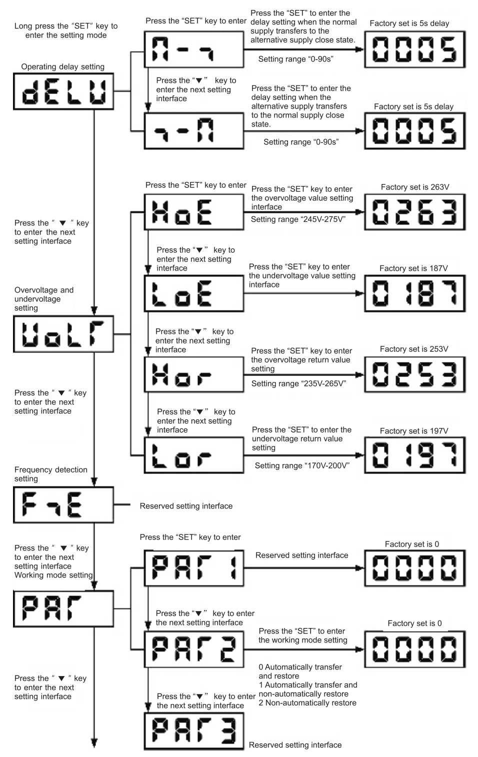

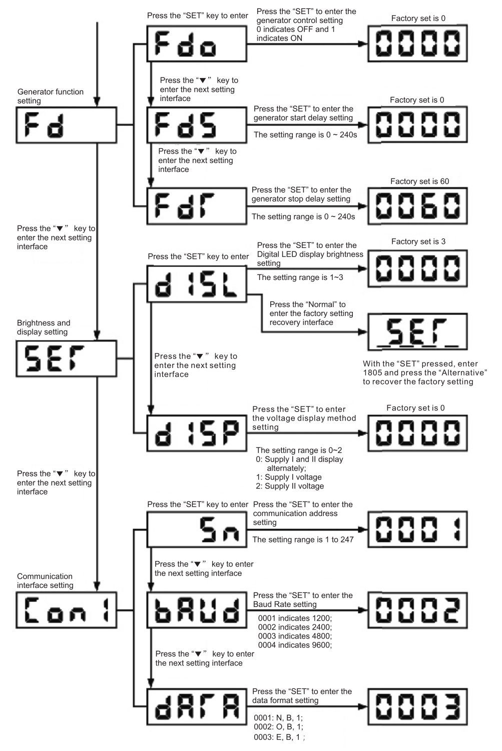

9 Switch debugging instruction

9.1 Connect the normal supply (I) and alternative supply (II) to the corresponding copper bar;

① Auto debugging sequence:

Normal supply ON, alternative supply ON, close supply I, normal supply OFF, alternative supply ON, close the supply II; normal supply recover, close supply I (see the white indicating arrow shown on the switch board).

② Remote debugging

Press button SB1, connect supply I;

Press button SB1, connect supply II;

9.2 When the supply I or supply II is closed, the LED signal on the panel should display correctly;

9.3 When the debugging completed, please turn off the power firstly, and manually switch to the "0" position through the handle. (Middle position, refer to the white indicating arrow on the panel).

Company's commitment

Under the premise that users follow the use and storage conditions and the product are well sealed, within 24 months from the production date, our company will provide repair and replacement free of charge for any damage or abnormal operation due to poor manufacture quality. A paid repair will be provided if the warranty period expires. In case of damage due to one of the following situations, a paid repair will be given even if within the warranty period:

(1)Improper operation, maintenance, or storage;

(2)Modified and improper repair without permission;

(3)Damage due to falling off or during installation;

(4)Force majeure such as earthquakes, fires, lightning strikes, abnormal voltages, and secondary disasters;

If you have any question, please contact the dealer or our company's customer service department.

Customer service hotline: 400-826-8008

Certificate

DELIXI ELECTRIC LTD

Name: **Automatic Transfer Switching Equipment**

Model: **CDQ1s series**

This product passes the inspection and is allowed to be sold.

Conforming standard: **GB/T 14048.11/ IEC 60947-6-1**

Inspector: **Check 01**

Production date: **See the label on the inner box**

DELIXI ELECTRIC LTD
DELIXI Electric Industrial Park, Liushi Town, Leqing City, Zhejiang Zip:325604
Tel: (86-577) 6177 8888
Fax: (86-577) 6177 8000
Customer service hotline:400-826-8008

www.delixi-electric.com
This User Manual is the eleventh version issued in Sept., 2021

User Manual for CDQ1s Automatic Transfer Switching Equipment

Conforming standards: GB/T 14048.11
IEC 60947-6-1

☐ Please read this manual carefully before installing and using this product, and keep it for reference

CDQ1s Automatic Transfer Switching Equipment

Safety Notice

Please read this manual carefully before the installation, operation, maintenance and inspection of this product, and install & use this product properly in accordance with the instruction.

- Do not operate the automatic switching Equipment with wet hands;
- Do not touch the live part after power-on;
- Make sure the product is de-energized before maintain and repair.
- Do not connect the active output terminals with any external power source to prevent damage to the controller;
- Do not test the product by short-circuit;
- Make sure to disconnect the electronic components (including the controller) with the products, while testing the insulation resistance or power frequency withstand voltage, or the product performance would be reduced.
- Do not operate the product manually in the automatic mode;
- Please connect the wire-in terminal with the N line properly for 3P product, or the transferring would not happen.
- Make sure the power phase sequence of the normal terminal and the alternative terminal are same during installation, or the motor load might rotate reversely;
- Make sure the rated voltage, rated current, frequency and characters of the product meets the requirements before operation;

Packing list

No.	Item	Unit	Qty.
1	Automatic transfer switching Equipment	Pcs	1
2	Handle	Pcs	1
3	Spare fuses (250V/3A, φ5x20)	Pcs	2
4	User Manual	Pcs	1
5	Insulating barrier	Sheet	4 pcs / 3P, 6 pcs / 4P (2P, or 1600AF and above has no insulating barrier)
6	Key (auto / manual)	Pcs	2

1 Model and its meaning

CD Q 1s - □ / □ □ □

- Default: upside wire-in; D: downside wire-in;
- Controller type: Default: basic model; B: Digital LED display type.
- Number of poles: 2P: 2 poles; 3P: 3 poles; 4P: 4 poles
- Ampere frame
- Design No.
- Transfer switching Equipment TSE
- Company code

2. Main technical parameters

Conforming standards: GB/T 14048.11, IEC 60947-6-1

Model	CDQ1s-100	CDQ1s-160	CDQ1s-250	CDQ1s-630	CDQ1s-1600	CDQ1s-3200
Rated current	16, 20, 25 32, 40, 50 63, 80 ,100	100, 125 140, 160	160 ,180 200 ,225 250	400, 500 630	630, 700 800, 1000 1250, 1600	2000, 25000 3200
Number of poles	2, 3, 4	2, 3, 4	2, 3, 4	3, 4	3, 4	3, 4
Rated insulation voltage Ui	690V				1000V	
Rated impulse withstand voltage Uimp	8kV				12kV	
Rated operational voltage Ue	2-pole AC230V, 3-pole and 4-pole AC-400V					
Rated short-circuit making capacity	6Ie					
Rated short-time withstand current	5kA	10kA		12.6kA	32kA	50kA
Rated short-time making current	7.65kA	17kA		32kA	67.2kA	105kA
Transfer time	≤2s					
Use category	AC-33iB					
Mechanical durability	6000	6000	6000	3000	3000	2000
Electrical durability	1500	1000	1000	1000	500	500
Controlling voltage	AC230V 50Hz					
Normal supply return mode	Automatically transfer and restore; Non-automatically restore; Automatically transfer and non-automatically restore(mutual backup)					
Power transfer type	Grid power-Grid power, Grid power-Generator					
Controlling features	Basic type: voltage loss transfer, return after recover; Digital LED display type: Over-voltage and under-voltage transfer, delay adjustable					
Monitoring alternative voltage loss	Normal supply abnormal & alternative voltage loss, not transferring					
Fire control dual-trip	■					
Normal and alternative supply closing state output	■					
Remote control (basic type)	–	■				

3. Switch structure introduction:

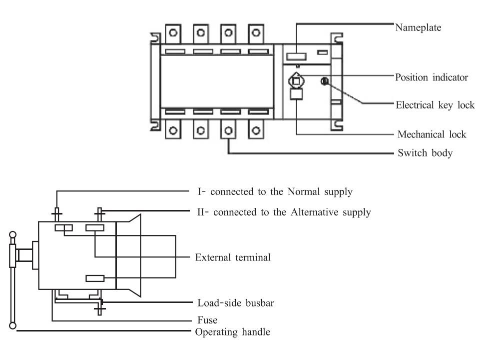

3.1 Electrical key lock: Used to control the power supply of control line inside the switch. Auto indicating ON and Manual indicating OFF.

Basic type: When ON, the automatic and remote operations can be realized; when OFF, only the manual handle operation is allowed.

Digital LED display type: When ON, operate the button to transfer the Manual / Auto functions; when OFF, only the setting and manual handle operation are available, rather than automatic or button switching operation.

3.2 Operating handle: The electric lock must be off before the handle is used to operate the switch;

3.3 Mechanical padlock: Before inspection, rotate the switch to the 0-gear position by operating handle, pull up the lock mechanism and lock it: (when pulling up the mechanical padlock, the control power supply inside the switch would be cut off; then the switch cannot be operated neither by electrically nor manually operation).

3.4 Position indicator: used to indicate the switch working positions (I, 0, II);

3.5 Control voltage: the control voltage of the switch is 220VAC;

3.6 Switch body: The front part is source I, which is connected to the "normal supply"; the rear part is source II, which is connected to the "alternative supply".

4 Outline and installation dimensions

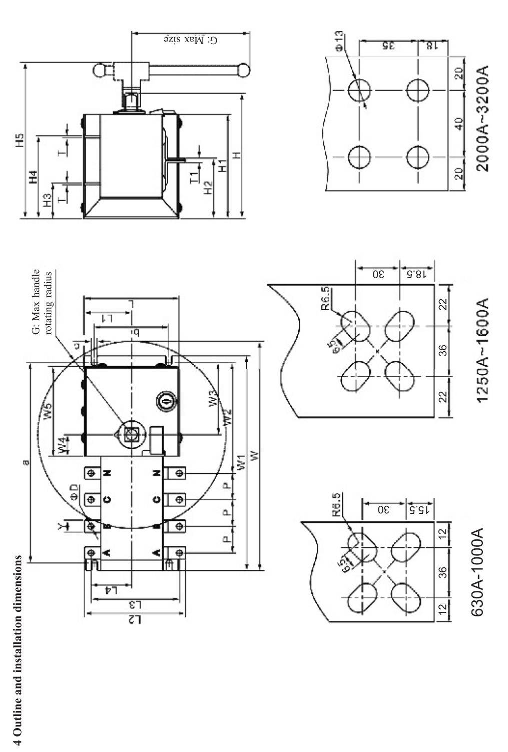

Spec.		Installation dimensions a	b	c	Outline dimensions and others W	W1	W2	W3	W4	W5	P	Y	ΦD	L	L1	L2	L3	L4	H	H1	H2	H3	H4	H5	T	T1	G
CDQ1s-100/2P/3P		215	83	6.5	255	233	124	82	24.5	102	30	13	7	107	53.5	118	103	45	141	117	40	40	93	170	2.5	2.5	115
CDQ1s-100/4P		230			270	243						14				116	99.5	43			68					5	
CDQ1s-160/2P/3P		245	102	7	320	265	160	91	30.5	110	37	20	8.5	140	76.5	142	122	53	195	164	59	57	130	230	3.5	3.5	144
CDQ1s-160/4P		284			348	305	156.5		34	115					77	147	126	60			55	58					
CDQ1s-250/2P/3P		292	106	7	362	312	165	94	32	110	50	25	10	140	76.5	176	148	70	210	180.5	64	65	146	244.5	3.5	3.5	144
CDQ1s-250/4P		347	102		412	370		91	35	115					77	164	140	65	195	163	57	57	130	225			
CDQ1s-630/3P		350	180	9	525	375	186	88.5	45	124	65	40	12	218	109	262	232	106	268	237	83	83	193	297	6	6	250
CDQ1s-630/4P		410			590	435	180																				
CDQ1s-1600/3P	630A~1000A	496	220	11	780	520	190	84.5	44	123	120	60	–	250	125	350	–	–	325	293	255	108	250	385	8	8	540
	1250A											80				370											
	1600A																					109	251		10	10	
CDQ1s-1600/4P	630A~1000A	606			1080	635	188					60				350						108	250		8	8	540
	1250A											80				370											
	1600A																					109	251		10	10	
CDQ1s-3200/3P	2000A	495	219	11	785	540	202	87	44	120	120	80	–	248	100	420	–	–	505	473	80/435	80/200	315/435	560	10	10	540
	2500A															430					85/440	85/205	320/440		15	15	
	3200A															440					90/445	90/210	325/445		20	20	
CDQ1s-3200/4P	2000A	610			1080	640										420					80/435	80/200	315/435		10	10	
	2500A															430					85/440	85/205	320/440		15	15	
	3200A															440					90/445	90/210	325/445		20	20	

5 How to use

5.1 Basic operation

* The mechanical padlock is only for inspection purpose. After being pulled up, the automatic function will be disabled;
* When the key lock is in "Auto" mode, the handle is not allowed for operation;
* Only when the key lock is in "Auto" mode, the fire control dual-trip function can be realized;
* When the key lock is in the "Auto" mode, and also the mechanical lock is not pulled up, the handle operation or key function setting can be realized;
* The wire-in terminal and wire-out terminal must be connected according to the A, B, C, and N indications.

5.2 Secondary terminal wiring

5.2.1 Basic type

* CDQ1s-160~3200 basic type: The "Auto" function can be realized only when the K2 is closed, and SB1 and SB2 remote closing function will be disabled after the K2 is closed;
* In the Auto mode, close the K1 to realize the fire control dual-trip; open the K1 to reclose the switch as per the automatic procedure;

HD1: Normal supply close indicating (AC 230V/0.5A active output)
HD2: Alternative supply close indicating (AC 230V/0.5A active output)
K1: Fire control signal input (passive)
Note: For 3P product, make sure to connect normal N to I N terminal, and alternative N to II N terminal, at the right side of wire-in part.
The power supply close output is active AC 230V/0.5A.

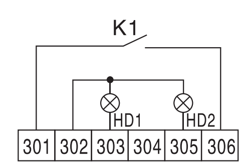

CDQ1s-100 Basic Type Secondary Terminal Wiring Diagram

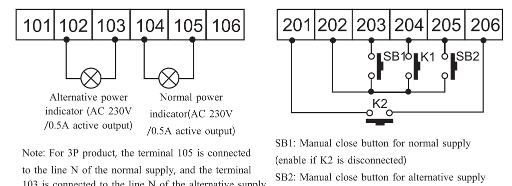

Note: For 3P product, the terminal 105 is connected to the line N of the normal supply, and the terminal 103 is connected to the line N of the alternative supply The power indicating output is active AC230V/0.5A.

SB1: Manual close button for normal supply (enable if K2 is disconnected)
SB2: Manual close button for alternative supply (enable if K2 is disconnected)
K1: Fire control signal input (passive)
K2: Auto mode input (the manual operation of SB1 and SB2 would be disabled after K2 is closed)

HD1: Normal supply close indicating (AC230V/0.5A active output)
HD2: Alternative supply close indicating (AC230V/0.5A active output)
HD3: Dual-OFF position indicating (AC230V/0.5A active output)

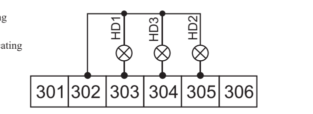

CDQ1s-160~3200 Basic Type Secondary Terminal Wiring Diagram

5.2.2 Digital LED display type

* DC 24V power supply shall be connected for the fire control dual-trip functions of digital LED display type. Dual-trip is realized once DC24V is connected, and output the fire control feedback signal; Disconnect the 24VDC power supply to reclose the switch as per the automatic procedure;

* 501 / 502 /503 are passive signal terminals for generator functions

HL1: Normal power indicator (AC230V/0.5A active output)
HL2: Alternative power indicator (AC230V/0.5A active output)
HD1: Normal supply close indicator (AC230V/0.5A active output)
HD2: Alternative supply close indicator (AC230V/0.5A active output)
401/402: Fire control feedback (passive output)
501: Generator signal common terminal
502: Generator signal start terminal
503: Generator signal stop terminal
601/602: Fire control signal input (DC24V)
Note: For 3P product, make sure to connect normal N to 103 terminal, and alternative N to 303 terminal.
The power & close indicating output is active AC230V/0.5A

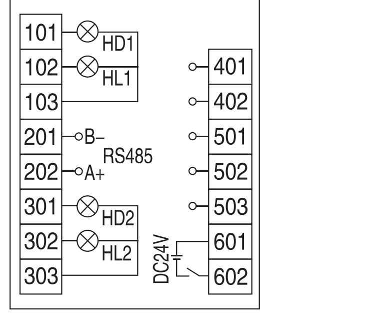

CDQ1s-100 Digital LED Display Type Secondary Terminal Wiring Diagram