B1 Isolation switch and fuse

HGLZ isolator

Selection guide

	Derivative type	Current specification	Number of poles	Mode of operation	Auxiliary contact	Observation window	Double throw switch structure type
HGL	Z	16	3	J	11	K	C
	Default :Single -throw switch Z: Double throw switch i: 6 series	16: 16A ... 3150: 3150A	3: 3P 4: 4P	Default: in-cabinet operatiion J: Out-of -cabinet operation	Default:unassisted 11: With a pair of auxiliary 22: With two auxiliary pairs	Default: No viewing window K: Tape viewing window	Default : Up and down type C:Right-left type

Product features

The acceleration mechanism, which can be released instantaneously by the spring energy storage, enables quick switching or sectioning .It has nothing to do with the speed of the handle.Greatly improve the ability to extinguish arc.The shell made of glass fiber reinforced unsaturated polyester resin has good flame retardant properties, dielectric properties, carbonization resistance and impact resistance. Double break point two separate contact surface, the pressure of the contact is guaranteed by the sheet spring, and the limit position of the on/off is automatically determined, with an obvious on/off mark indicating the on/off position.

Technical parameter

Product model	HGLZ series isolation switch							
"Up and down type" convention free air heating current (A)	/	80 100	125 160	200 250	315 400	500 630	800 1000 1250 1600	2000 2500 3150
"Left and right" conventions free air heating current (A)	16 25 32 40 63	80 100	125 160	200 250	315 400	500 630	800 1000 1250 1600	/
Power frequency withstand voltage (A)	2000							
Rated insulation voltage (A)	800							
Rated impulse withstand voltage Uimp	12kV（2000m）							
Rated short-time withstand current kA	2		12		20	25	50	
Mechanical life	8000			5000			3000	1000

B1 Isolation switch and fuse

HGLZ isolator

Outline and mounting dimensions (mm)

■ HGLZ-80 ~ 100A Isolation switch outline and mounting dimensions

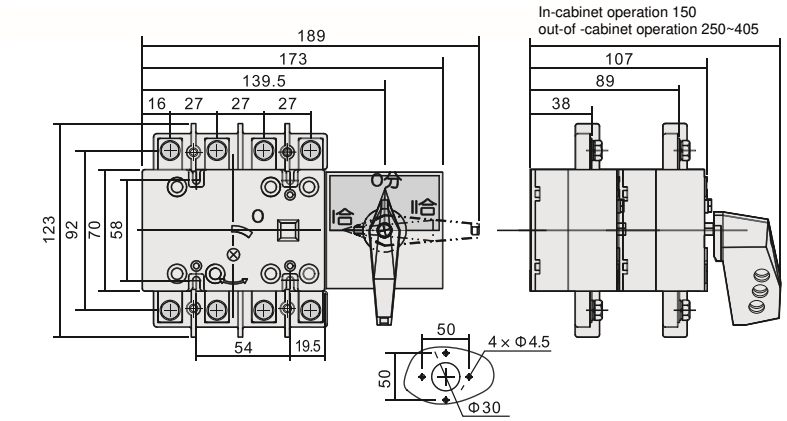

Installation dimensions of the handle panel outside the cabinet

■ HGLZ-125 ~ 1600A Isolation switch outline and mounting dimensions

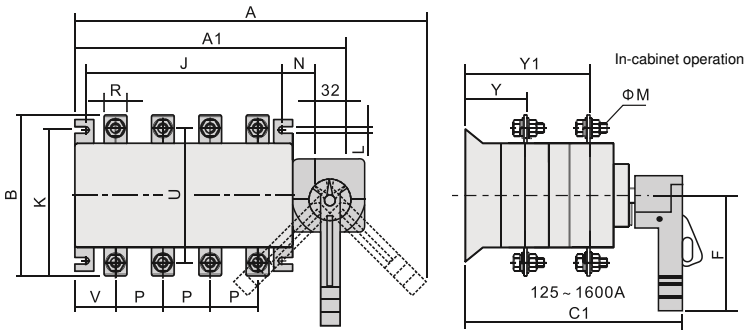

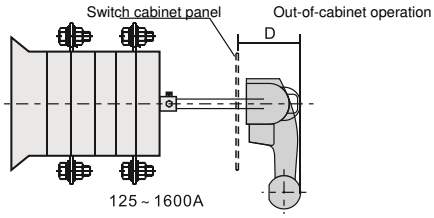

B1 isolation switch and fuse

HGLZ isolator

Gauge current	Outline and mounting dimensions (mm)															
	A	A1	B	C1	D	F	J	K	L	N	P	R	U	V	ϕM	Y	Y1
125-160A/3	265	196	135	211	85	115	120	95	7	29.5	36	20	115	29	8	55	122
125-160A/4	295	226	135	211	85	115	120	95	7	29.5	36	20	115	29	8	55	122
200-250A/3	310	235	170	240	85	115	160	115	8.8	29.5	50	25	142	37	10	65	148
200-250A/4	360	288	170	240	85	15	210	115	8.5	29.5	50	25	142	37	10	65	148
315-400A/3	405	305	240	312	85	143	210	180	10	43	65	30	205	48	10	85	200
315-400A/4	460	365	240	312	85	143	275	180	10	43	65	30	205	48	10	85	200
500-630A/3	405	305	260	312	85	143	210	180	10	43	65	40	220	48	12	86	201
500-630A/4	460	35	260	312	85	143	275	180	10	43	65	40	220	48	12	86	201
800-1000A/3	585	480	320	410	105	165	350	220	11	50	120	60	246	73	10	115	260
800-1000A/4	715	600	320	410	105	165	473	220	11	50	120	60	246	73	10	115	260
1250A/3	585	480	340	410	105	165	350	220	11	50	120	80	246	73	12	115	260
1250A/3	715	600	340	410	105	165	473	220	11	50	120	80	246	73	12	115	260
1600A/3	585	480	340	410	105	165	350	220	11	50	120	80	246	73	12	116	262
1600A/3	715	600	340	410	105	165	473	220	11	50	120	80	246	73	12	116	262

■ HGLZ-2000 ~ 3150A Isolation switch outline and mounting dimensions

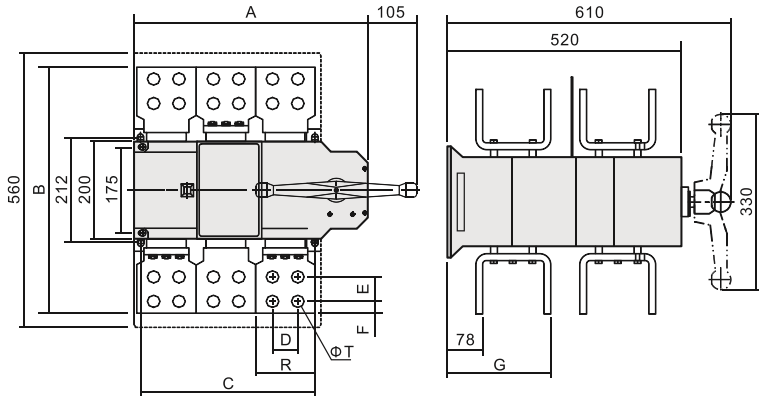

HGL-2000~315A In-cabinet operation

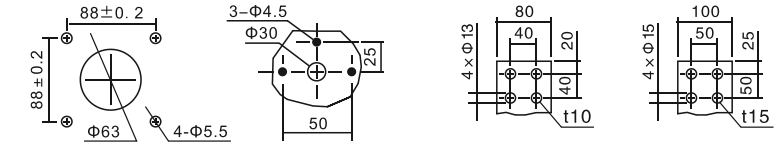

Type A cabinet external handle seat mounting dimensions

B type cabinet external handle seat mounting dimensions

2000 – 2500A

3150A

Note: 1. The A handle has a total length of 405, and the B handle has a total length of 330;

2. Generally type A handle, if you need type B handle can be customized.

B1 Isolation switch and fuse

HGLZ isolator

Gauge current	Outline and mounting dimensions (mm)								
	A	B	C	D	E	F	G	ϕT	R
2000A/3	479	418	353	40	40	20	220	10	80
2000A/4	598	418	473	40	40	20	220	10	80
2500A/3	479	418	453	40	40	20	220	10	80
2500A/4	598	418	473	40	40	20	220	10	80
3150A/3	492	492	353	50	50	25	320	15	100
3150A/4	492	492	473	50	50	25	320	15	100

■ HGLZ-16 ~ 100/C Isolation switch outline and mounting dimensions

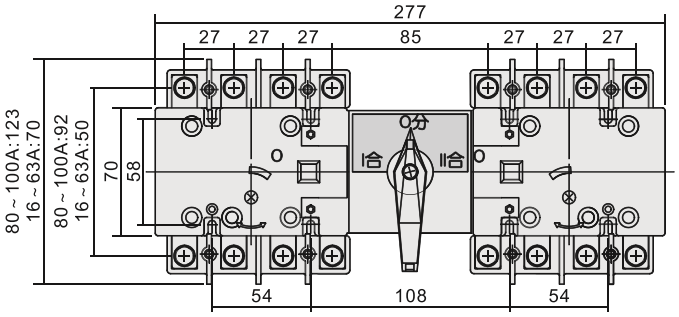

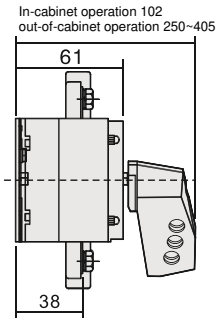

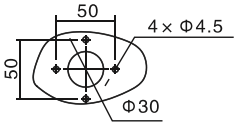

Installation dimensions of the handle panel outside the cabinet

B1 isolation switch and fuse

HGLZ isolator

■ HGLZ-125 ~ 1600/C isolation switch outline and mounting dimensions

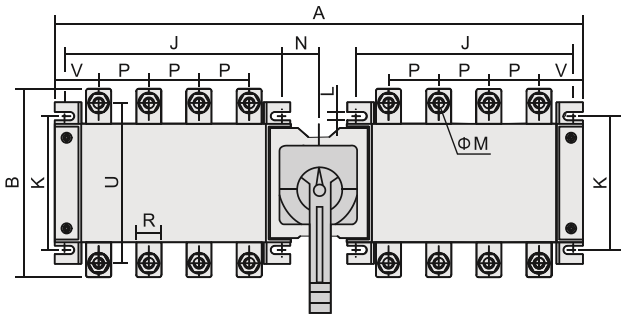

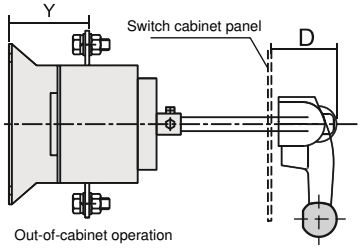

Gauge current	Outline and mounting dimensions (mm)														
	A	B	C	D	F	J	K	L	N	P	R	U	V	ϕM	Y
125-160A/3	320	135.5	144	85	115	120	95	7	29.5	36	20	115	29	8	55
125-160A/4	380	135.5	144	85	115	150	95	7	29.5	36	20	115	29	8	55
200-250A/3	400	172	158	85	115	160	115	8.5	29.5	50	25	142	37	10	65
200-250A/4	503	172	158	85	115	210	115	8.5	29.5	50	25	142	37	10	65
315-400A/3	545	240	195	85	143	210	180	10	43	65	30	205	48	10	85
315-400A/4	66	240	195	85	143	275	180	10	43	65	30	205	48	10	85
500-630A/3	545	260	195	85	143	210	180	10	43	65	40	220	48	12	86
500-630A/4	660	260	195	85	143	275	180	10	43	65	40	220	48	12	86
800-1000A/3	840	320	258	105	165	350	220	11	50	120	60	/	73	10	115
800-1000A/4	1080	320	258	105	165	473	220	11	50	120	60	/	73	10	115
1250A/3	840	340	258	105	165	350	220	11	50	120	60	/	73	12	115
1250A/3	1080	340	258	105	165	473	220	11	50	120	60	/	73	12	115
1600A/3	840	340	258	105	165	350	220	11	50	120	60	/	73	12	116
1600A/3	1080	340	258	105	165	473	220	11	50	120	60	/	73	12	116

Operating environment and working conditions

Ambient air temperature: the upper limit shall not exceed +40 ° C, the lower limit shall not be less than -5 ° C, and the average value within 24h shall not exceed +35 ° C;

Installation site elevation:no more than 2000 meters;

Atmospheric conditions: the relative humidity of the atmosphere does not exceed 50% when the ambient air temperature is +40 degrees Celsius; You can havehigher relative humidity at lower temperatures, for example at 20 degrees Celsius, the relative humidity is 90%;It also takes into account the elimination of condensation on the surface of the product due to temperature changes;

Pollution level